5G-XHaul

Dynamically Reconfigurable Optical-Wireless Backhaul/Fronthaul with Cognitive Control Plane for Small Cells and Cloud-RANs

D5.2 Evaluation of wireless-optical converged functionalities at UNIVBRIS testbed

This project has received funding from the European Union's Framework Programme Horizon 2020 for research, technological development and demonstration

Advanced 5G Network Infrastructure for the Future Internet

Project Start Date: July 1st, 2015 | Duration: 36 months

H2020-ICT-2014-2 671551 | June 31st, 2016 – Final Version

Project co-funded by the European Commission

Under the H2020 programme

Dissemination Level: Public

Grant Agreement Number:	671551
Project Name:	Dynamically Reconfigurable Optical-Wireless Back-haul/Fronthaul with Cognitive Control Plane for Small Cells and Cloud-RANs
Project Acronym:	5G-XHaul
Document Number:	D5.2
Document Title:	Evaluation of wireless-optical converged functionalities at UNIVBRIS testbed
Version:	Final
Delivery Date:	June 30th 2017 (**July 18th 2017**)
Responsible:	**UNIVBRIS-HPN**
Editor(s):	Koteswararao Kondepu, Anna Tzanakaki (**UNIVBRIS-HPN**)
Authors:	Koteswararao Kondepu, Anna Tzanakaki (**UNIVBRIS-HPN**), Daniel Camps-Mur (**I2CAT**), Eduard García (**I2CAT-UPC**), Andy Lunness, Peter Legg (**BWT**), Jim Zou, Michael Eiselt (**ADVA**), Jay Kant Chaudhary, Jens Bartelt, (**TUD**), Albrecht Fehske (**AIR**), Jesús Gutiérrez (**IHP**)
Keywords:	Technology convergence, Fronthaul, Backhaul, Passive Optical Network, Time Shared Optical Network, Millimetre Wave, Sub-6, CPRI.
Status:	Final
Dissemination Level	**Public** / Confidential
Project URL:	http://www.5g-xhaul-project.eu/

Table of Contents

EXECUTIVE SUMMARY 6

1 INTRODUCTION 7

2 5G-XHAUL DATA PLANE: WIRELESS-OPTICAL TECHNOLOGIES TO BE DEMONSTRATED 8

2.1 Wireless Technologies 9
2.1.1 Massive MIMO Remote Radio Heads and Functional Splits 9
2.1.2 Millimetre wave (mmWave) 10

2.2 Optical Technologies 13
2.2.1 Time-Shared Optical Network 13
2.2.2 Flexible fronthaul architecture: 14

3 DATA PLANE – CONVERGED FRONTHAUL TECHNOLOGIES/SERVICES 15

3.1 BBU Pool and RRH Integration 15
3.1.1 Integration Objectives 15
3.1.2 Setup 15
3.1.3 Results 16

3.2 TSON edge node fucntions with CPRI extension (Converged LTE and Optical) 18

4 DATA PLANE- CONVERGED WIRELESS TECHNOLOGIES/SERVICES 21

4.1 mmWave and Sub-6 for Backhaul Services 21
4.1.1 mmWave Evaluation 21
4.1.2 Sub-6 experimental evaluation 22
4.1.3 Sub-6 mmWave interfacing 25

5 DATA PLANE- CONVERGED ACTIVE AND PASSIVE OPTICAL TECHOLOGIES/SERVICES FOR BOTH FH AND BH 27

5.1 TSON-WDM PON integration 27
5.1.1 Backhaul and Fronthaul Architecture 27
5.1.2 Testbed Setup and Implementation 27
5.1.3 Experimental Results 28

6 SUMMARY AND CONCLUSIONS 31

7 REFERENCES 32

8 ACRONYMS 33

List of Figures

Figure 2-1: Physical Infrastructure: FH and BH services are provided over a common wired/wireless network infrastructure. 8
Figure 2-2: Cellular network system architecture. 9
Figure 2-3: Functional splits. Split A is used in the AAS. 9
Figure 2-4. mmWave technologies in 5G-XHaul. 10
Figure 2-5: Description of LightningII-J Modules. 11
Figure 2-6: RWM6050 dual modem chip as used in the BWT Typhoon platform. 12
Figure 2-7: Typhoon board holding a dual modem RWM6050 (BH2) chip. 13
Figure 2-8: WDM-PON system architecture flexibly connecting RRHs with BBUs. 14
Figure 3-1: Joint integration testbed set up of BBU, WDM-PON and RRH. 16
Figure 3-2: Snapshot of GUI of the UE highlighting received spectrum, constellation and throughput. 17
Figure 3-3: Spectrum analyser in the case that two separate CPRI streams. 17
Figure 3-4: Joint integration testbed demonstration at EuCNC. 18
Figure 3-5: CPRI Frame Structure. 19
Figure 3-6: HG CPRI module. 19
Figure 3-7: TSON extension with CPRI module in house setup. 20
Figure 4-1: Typhoon board during testing. 21
Figure 4-2. Typhoon modules being used to demonstrate a unidirectional link at 3 Gb/s. 22
Figure 4-3. Screen shot of received data rate. 22
Figure 4-4: Sub-6 data-plane performance experiment set up. 23
Figure 4-5: Sub-6 Experiment configurations. 24
Figure 4-6: Relay mode experiments with directive (left) and omnidirectional (right) antennas. 25
Figure 4-7: Sink mode (left) and Source (mode) experiments with directive antennas. 25
Figure 4-8: Interfacing options between 5G-XHaul mmWave and Sub-6 devices. 26
Figure 5-1: The role of TSON and WDM-PON technologies in the 5G-XHaul project. 27
Figure 5-2: Testbed configuration of TSON and WDM-PON Integration using BIO dark fibre. 28
Figure 5-3: Downstream BER measurements. 29
Figure 5-4: Upstream BER measurements. 29
Figure 5-5: Upstream Latency measurements. 30

List of Tables

Table 3-1: TSON + CPRI (as a BBU) on NetFPGA SUME Board. 20
Table 3-2: TSON + CPRI (as a RU) on NetFPGA SUME Board. 20

Executive Summary

WP5 is the work package responsible for the demonstration activities of the project. The relevant work involves implementation of the testbed facility for the integration and validation activities. The testbed design is driven by the use-cases and architecture specifications as well as the technology developments of the technical work packages. The overall 5G-XHaul solution will be validated over the UNIVBRIS testbed including the experimental facilities of the HPN laboratory and the Bristol smart city test-bed available through Bristol Is Open (BIO).

In this context, D5.2 is reporting on the deployment and tests of RAN services over the integrated optical-wireless backhaul (BH) and fronthaul (FH) solution. The testbed infrastructure is based on a hybrid optical transport integrating a dynamic frame based optical network technology relying on Time Share Optical Network (TSON) and Wavelength Division Multiplexed (WDM) Passive Optical Networks (PONs). In terms of wireless technologies, 5G-XHaul demonstrations focus on millimetre wave (mmWave) and Sub-6 solutions and their integration. Relevant work and test results on these technologies are presented. In addition, this deliverable reports on the technology extensions carried out to enable the support of FH and BH services by the hybrid optical transport. Successful integration of passive and active optical network technologies and a set of relevant results demonstrating the feasibility of the proposed 5G-XHaul infrastructure are reported.

1 Introduction

Emerging 5G networks require new technologies to support the 5G key performance indicators (KPIs) [1] with the most important ones being high bandwidth and sub-millisecond end-to-end latency. To address these requirements, converged optical and wireless networks technologies are proposed by 5G-XHaul to form a flexible transport infrastructure [2]. 5G-XHaul proposes a new centralised radio access network (C-RAN) architecture supporting both backhaul (BH) and fronthaul (FH) functionalities. The FH services refer to operational services offered to the wireless network interconnecting Radio Units (RUs) with the centralised Baseband Units (BBUs) in support of the C-RAN solution.

WP5 is the 5G-XHaul work package responsible for the demonstration activities of the project aiming to prove the feasibility of the 5G-XHaul solution. More specifically WP5 focuses on the demonstration of the main architectural functionalities and features described in detail in [3] through a set of planned validation experiments that will take place in the project testbed facilities.

The relevant work involves implementation of the testbed facility to be used in support of the integration and validation activities. The testbed design is driven by the use-cases and architecture specification defined in WP2, as well as the initial inputs received from WP3 and WP4 in terms of technology developments and requirements for prototype integration.

A central part of the 5G X-Haul architectural proposal relates with the integrated wireless-optical converged transport network functionalities that will be demonstrated over the UNIVBRIS testbed including the experimental HPN laboratory facility and the Bristol smart city testbed available through Bristol Is Open (BIO).

In this context, D5.2 is reporting on the deployment and tests of RAN services over the integrated optical-wireless BH and FH solution.

The testbed infrastructure is based on a hybrid optical transport integrating a dynamic frame based optical network technology relying on the Time Shared Optical Network (TSON) and Wavelength Division Multiplexed (WDM) Passive Optical Networks (PONs). In terms of wireless technologies, 5G-XHaul demonstrations focus on m-Wave and Sub-6 solutions and their integration. Relevant work and test results on these technologies are presented in this deliverable. In addition, this deliverable reports on the technology extensions carried out to enable the support of FH and BH services by the hybrid optical transport. Successful integration of passive and active optical network technologies and a set of relevant results demonstrating the feasibility of joint BH and FH services through the 5G-XHaul infrastructure are also reported.

Organisation of the document

This deliverable is structured in six main sections. Following the introduction section, Section 2 provides a high-level evaluation of 5G-XHaul data-plane to be demonstrated with convergences aspects between wireless and optical technologies. Section 3 concentrates on data-plane converged fronthaul services. This section mainly describes the details for fronthaul services including baseband unit processing and functional splits relevant in the context to the demonstration activities. Moreover, this section describes optical technologies and the required extension performed to support fronthaul services. Section 4 describes data-plane converged BH services, which includes mmWave and Sub-6 as BH technologies. Section 5 focuses on one of the 5G-PPP aspect, which is the development focus of the 5G-XHaul project: “the high degree of heterogeneity between various technologies, specifically active and passive technologies”. This section demonstrates the successful integration of active and passive optical technologies relevant in the context to the demonstration activities. Finally, Section 7 provides a summary and the main conclusions of the deliverable.

2 5G-XHaul data plane: wireless-optical technologies to be demonstrated

The 5G-XHaul data-plane considers an integrated optical and wireless network infrastructure for transport and access. The data plane adopts TSON a dynamic and flexible/elastic frame-based optical network solution integrated with enhanced capacity WDM PONs [1] to support demanding capacity and flexibility requirements for traffic aggregation and transport. Through this architecture, already featured in the overall data plane architecture of the 5G-PPP architectural vision [1], 5G-XHaul aims to efficiently support a large variety of services envisaged for the 5G era. On the other hand, the wireless domain comprises a dense layer of small cells, and these small cell layers are complemented by a macro cell layer to ensure ubiquitous coverage. Small cells can be wirelessly backhauled to the macro-cell site using a combination of millimetre wave (mmWave) and Sub-6 wireless technologies. Moreover, the 5G-XHaul architecture allows small cells to be directly connected to a Central Unit (CU) using a hybrid optical network platform.

A key architectural issue associated with this type of infrastructure is the placement of the Base Band (BB) processing with respect to the Radio Units (RUs). In the concept of Cloud Radio Access Network (C-RAN), where RUs referred to as Remote Radio Heads (RRHs) are connected to remote BB processing pools through high bandwidth transport links, is proposed as one solution that can be adopted to overcome the limitations of the traditional RAN approach (Figure 2-1). The inclusion of FH requirements in this infrastructure introduces new operational network services that need to be supported over the transport network. More specifically, the densely distributed RUs need to be connected to compute resources responsible for BB processing, with very stringent delay and synchronisation requirements. The proposed architecture is able to support BH and FH jointly in a common infrastructure, maximising the associated sharing gains, improving efficiency in resource utilisation and providing measurable benefits in terms of cost, scalability, sustainability and management simplification. In the FH case, parts of the Baseband Unit (BBU) processing can be performed locally and some parts remotely at Data Centres (DCs) enabling the C-RAN flexible split paradigm. BBUs are executed in general-purpose servers in the form of virtual entities. BH services can support interconnection of end-users with Virtual Machines (VMs) hosted in the DCs. Thereby, the data plane is able to split processing flexibly, with the aim to relax the stringent requirements in terms of transport capacity, delay and synchronisation.

The joint FH and BH requirements described above are supported through the adoption of the 5G-XHaul architecture employing a set of advanced wireless and optical network technologies. A key enabler of the proposed approach is the high capacity, flexible optical transport comprising both passive and active solutions. As already discussed the passive solution employs a WDM-PON infrastructure, while the active solution adopts the Time-Shared Optical Network (TSON) [3] enhanced with novel features for improved granularity, elasticity and synchronisation. A high level view of the 5G-XHaul infrastructure is provided in Figure 2-1, also discussed in detail in deliverable [3].

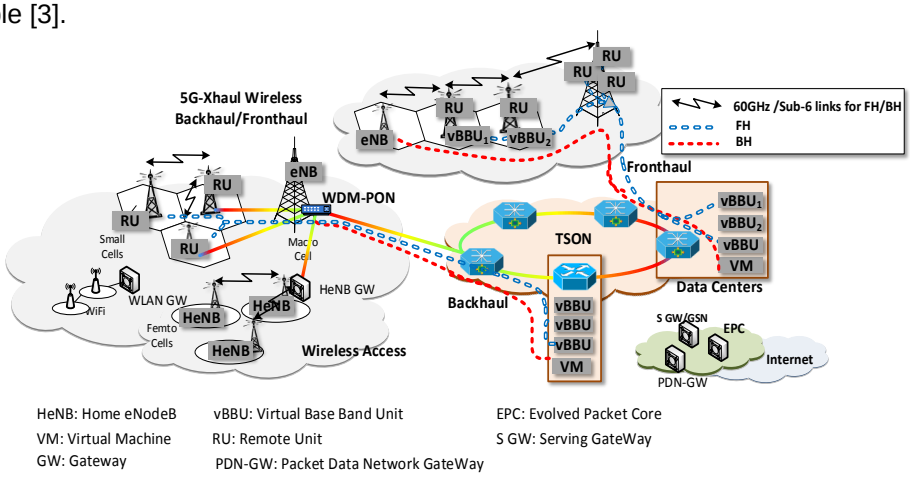

Figure 2-1: Physical Infrastructure: FH and BH services are provided over a common wired/wireless network infrastructure.

2.1 Wireless Technologies

This subsection describes the wireless technologies considered for demonstration purposes and reports some testing and evaluation results useful in the context of the upcoming demonstrations.

2.1.1 Massive MIMO Remote Radio Heads and Functional Splits

In WP2 [1][3][5], 5G radio access technologies were identified as having a major impact on future transport network design and dimensioning. Especially massive MIMO was seen as a potential challenge for FH, as the large number of antenna elements at the BS can potentially scale the required FH data rates to hundreds of Gbps. However, the recent Common Public Radio Interface (CPRI) specification can support FH data up to 24 Gbps [5]. New functional splits were identified as a key technology to overcome this challenge by performing, e.g. MIMO processing remotely at the RRH site.

Within 5G-XHaul's WP4, such an advanced antenna system (AAS) with remote antenna processing is being developed and a corresponding demonstration setup is being built. The progress on the technology was reported in D4.12 [7].

Figure 2-2 from D4.12 recapture the basic setup and functional split considered.

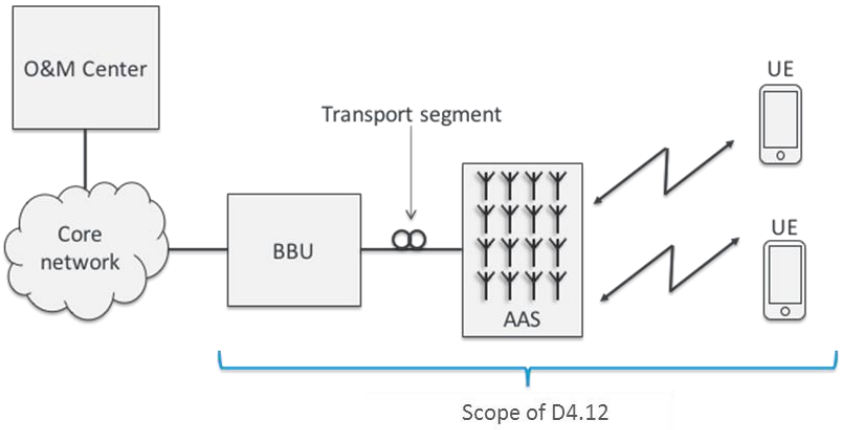

Figure 2-2: Cellular network system architecture.

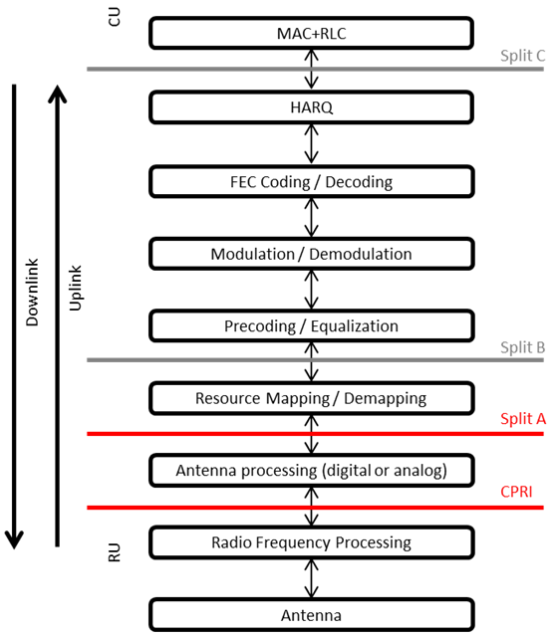

Figure 2-3: Functional splits. Split A is used in the AAS.

The signal processing functionalities between the BBU and RRH can be split into different functional splits as shown in Figure 2-3 which were investigated by the 5G-XHaul project and reported in D2.2 [3]. D4.12 [7] clearly showed the advantage of the considered split A shown in Figure 2-3 over the conventional CPRI split in terms of data rates, as well as the feasibility of the AAS in development by the 5G-XHaul SME-Partner Airrays (AIR).

The goal of WP5 is now to integrate the AAS within the 5G-XHaul architecture to verify its interworking capability, evaluate the performance and benefits associated with this functional split, and verify the overall 5G-XHaul approach for a future transport architecture. In Section 3.1 of this deliverable, we hence report the first successful integration testing of the AAS in a complete end-to-end link together with a BBU, WDM-PON transport, and UE receiver.

2.1.2 Millimetre wave (mmWave)

The mmWave technologies under development in the project are summarised in Figure 2-4. Two Blu Wireless Technology (BWT) mmWave platforms are illustrated, the Lightning (2015) and the Typhoon (2017). In both cases the BWT MAC and baseband (BB) interface to an RFIC with a phased array patch antenna. The Lightnings used for testing in WP4 [8] [9] and in the Bristol is Open (BIO) test-bed use SiBeam RFICs and antennae. The newer Typhoon platform is a more powerful unit with two modems within a single chip. During the project this will be deployed in BIO with a commercial RF/antenna front end, and tested separately with the analogue front-end (AFE) developed by IHP and TES.

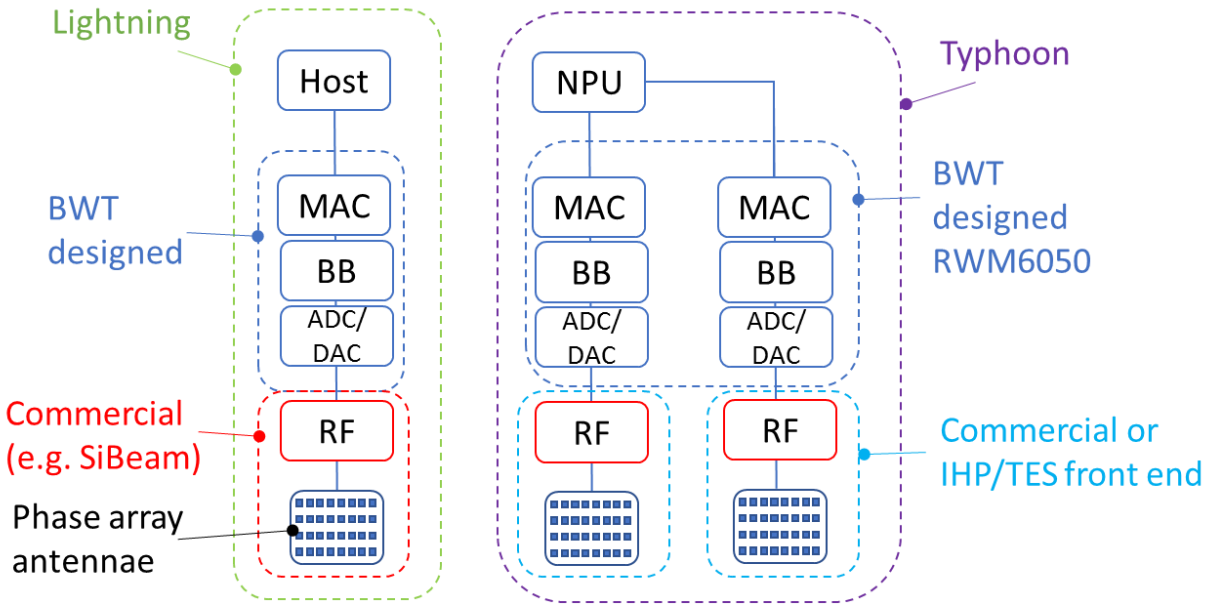

Figure 2-4. mmWave technologies in 5G-XHaul.

The BWT Lightning module was developed prior to the project and has been installed into the BIO test-bed. It is described in some detail in deliverable D4.5 [10] and a relevant summary is provided here in order to provide a clearer view of the technologies to be demonstrated.

The Lightning II-J Module is a 60 GHz 1 Gbps point to point R&D platform whose key features include:

- Blu Wireless Technology Ltd's ***PHY1*** SoC baseband modem
  - Incorporates Blu Wireless Technology Ltd's ***HYDRA*** IP.
  - Provides 2.6 GSamples/s IQ Analogue-to-Digital Converter (ADC) and Digital-to-Analogue Converter (DAC).
  - Implemented in 40 nm CMOS.
- 802.11ad based PHY and MAC with performance enhancements for range extension and BH operation
- A 60 GHz Phased Array beam-former operating over the 57-64 GHz band (V-band)

- An operational range of 200 metres to 300 metres at 1 Gbps data rate with transmit (Tx) and receive (Rx) electronic beam-steering over a +/- 45o azimuth coverage.
- 1 Gbps Ethernet (1000BASE-T), GPS and Bluetooth connectivity.
- Hermetically sealed aluminium casing suitable for mounting on street furniture with an associated bracket.

The module is illustrated in Figure 2-5.

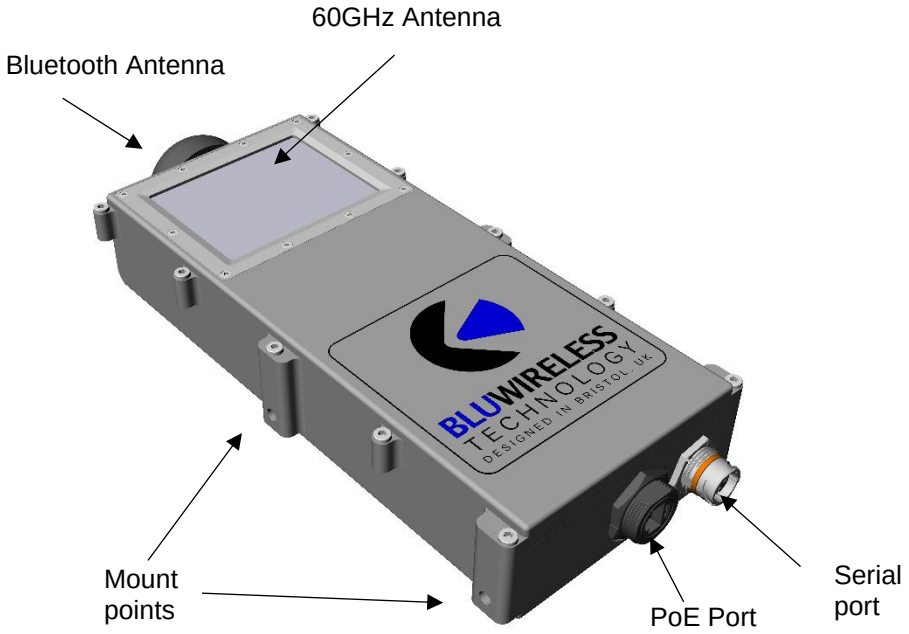

Figure 2-5: Description of LightningII-J Modules.

In 2017, the second generation platform from BWT has been developed: Typhoon. Typhoon will be deployed within the BIO test network in Bristol. Typhoon exploits a new dual modem chip manufactured by IDT under license from BWT, the RWM6050 [11], aka BH2 (the block diagram is depicted in Figure 2-6). The dual modem feature is included to facilitate the construction of meshed BH (rather than just a simple point to point link). The key features of the chip are:

- Dual modem with PHY + MAC + ADC/DAC + beam forming subsystems.
- Modulation and channelisation support.
- Beamforming support with phased array antenna.
- Extensions to support long distance transmission.
- Digital front end processing.
- Programmable real-time scheduler.
- Integrated network synchronisation.

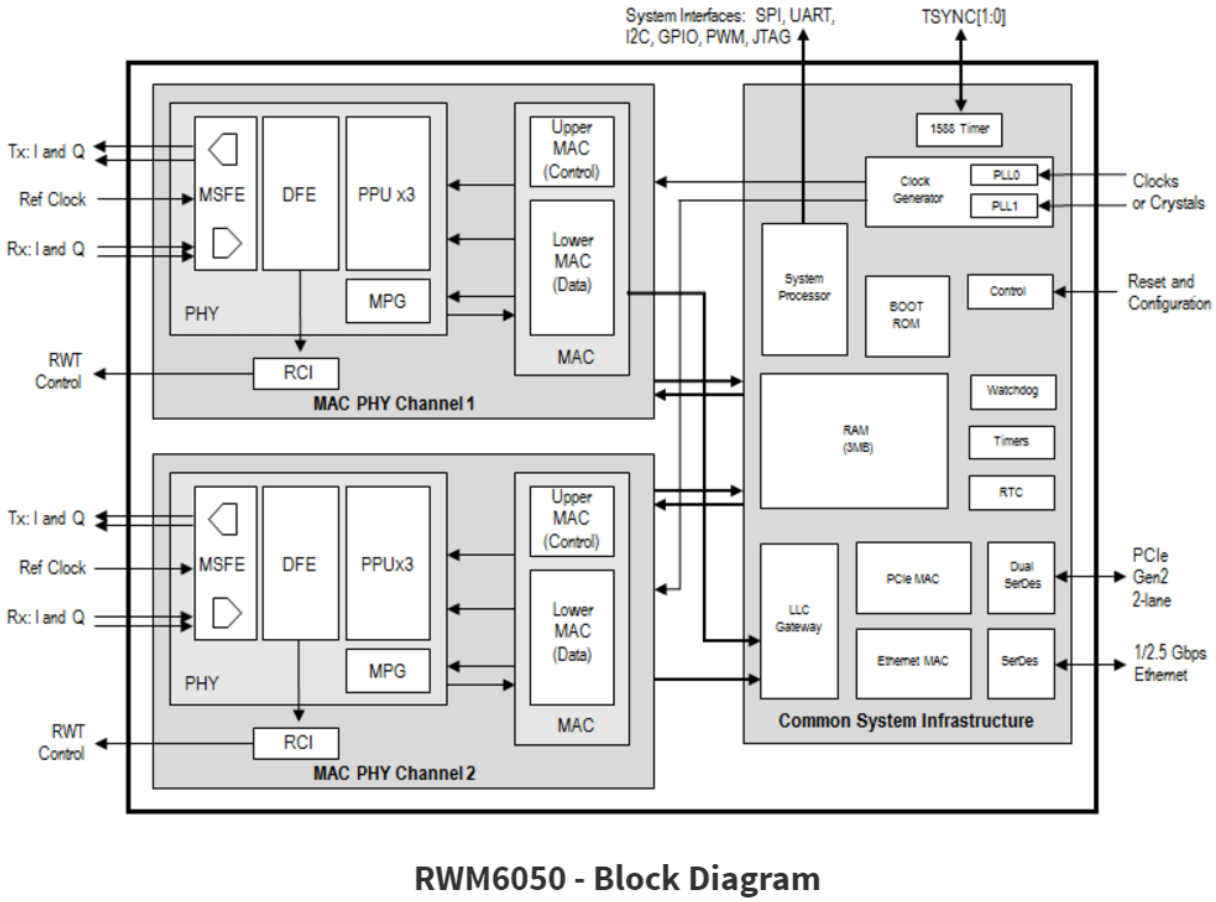

Figure 2-6: RWM6050 dual modem chip as used in the BWT Typhoon platform.

The Typhoon module consists of a main PCB (pictured in Figure 2-7) holding a single RWM6050 chip, interface connectors to mate with dual RF front ends/antennae and other support hardware. The interface to the MAC of each modem from a host device is over PCIe. An NPU mounted on a separate PCB can be plugged into the board (via PCIe).

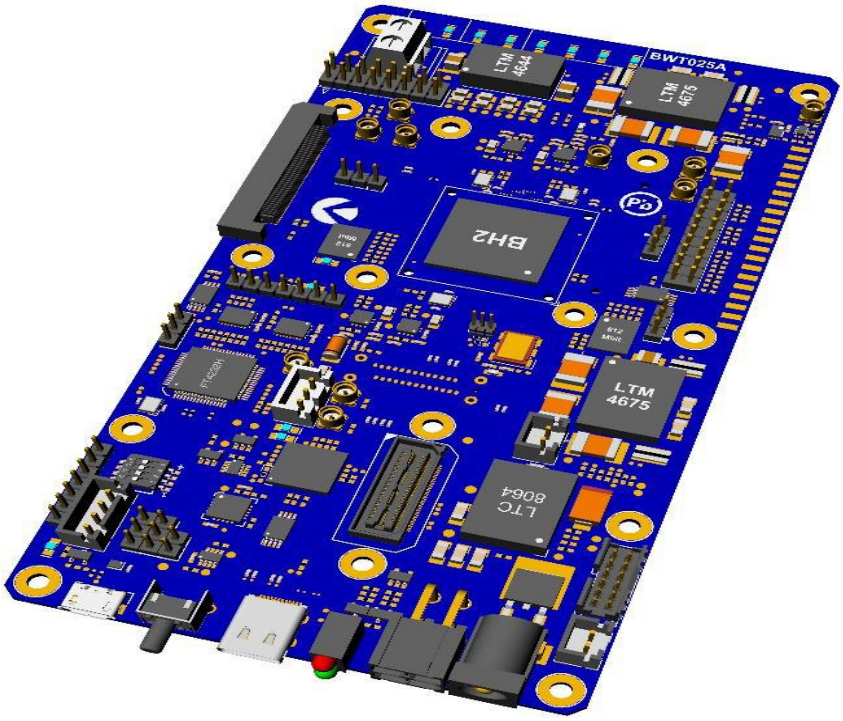

Figure 2-7: Typhoon board holding a dual modem RWM6050 (BH2) chip.

2.2 Optical Technologies

This subsection describes the optical WDM-PON and TSON technologies considered for demonstration purposes.

2.2.1 Time-Shared Optical Network

TSON is a multi-wavelength fully bi-directional synchronous and frame based flexible system. Its network implementation consists of FPGA optoelectronics platforms integrated with advanced optical components to enable high performance processing and transparent switching and transport. The FPGA platforms support multiple 10 Gbps (for control and transport) Dense Wavelength Division Multiplexed (DWDM) and Small Form-factor Pluggable (SFP) + transceivers. For the optical layer, TSON relies on fast optical ((Pb,La)(Zr,Ti)O3) (PLZT) switches having 10 ns switching speed as well as a set of active and passive components including Erbium Doped Fibre Amplifiers (EDFAs), MUX/DEMUXes etc. TSON is designed and implemented as a novel frame-based, time multiplexing network solution, offering dynamic connectivity with fine (sub-wavelength) granularity of bandwidth. TSON is a contention-less solution through the deployment of a central resource allocation engine of route, wavelength, and time assignment, responsible to set-up the sub-wavelength paths. The TSON solution includes two different types of nodes, the edge and the core nodes incorporating different functionality and level of complexity. TSON edge nodes provide the interfaces between wireless, PON and DC domains to the optical domain and vice versa. The ingress TSON edge nodes are responsible for traffic aggregation and mapping, while the egress edge nodes having the reverse functionality. TSON edge nodes use FPGA platforms for processing of incoming data streams and to generate optical time-slices from them at the ingress TSON edge, and also to regenerate the original information from time-sliced optical bursts at the egress TSON edge node. In order to send and receive data, each TSON edge node (see Figure 4 in [1]) uses four SFP + transceivers, two 1310 nm 10 km reach for end-point server traffic and control, and two DWDM 80 Km reach transceivers at 1544.72 nm and 1546.12 nm. The 1310 nm interfaces can be used to support both data and control traffic either separately or combined depending on whether out-off band or in-band control is adopted. Although the current TSON configuration allows handling of Ethernet frames, it natively supports of broad range of framing structures and communication protocols including CPRI, OBSAI, 10GEthernet etc.

In addition to this, it should be noted that as TSON supports Ethernet natively, it can transport CPRI and OBSAI either natively or through their packetised versions. A Next Generation Fronthaul Interface (NGFI) based on additional functional splits that provide a range of trade-offs between transport requirements and centralisation gains is being defined in IEEE 1904.3. In case that the future NGFI interface is packetised using Ethernet framing, it will be also natively supported by TSON.

2.2.2 Flexible fronthaul architecture:

The WDM-PON is designed to deliver a wavelength-based point-to-point (P2P) connectivity between BBUs and RRHs. Each WDM wavelength is currently able to achieve bit rates up to 10 Gbps bi-directionally (can be also extended to 25 Gbps, potentially), over a transmission distance of 20 km. Both the downlink and the uplink wavelengths can operate within the C-band over a single trunk fibre.

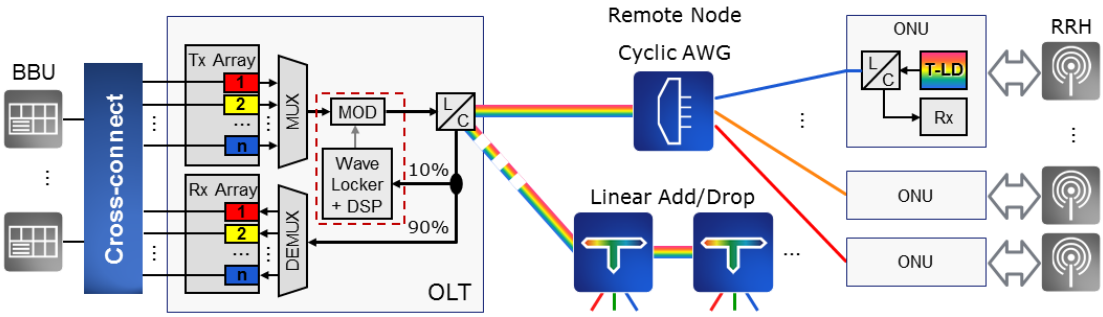

Figure 2-8: WDM-PON system architecture flexibly connecting RRHs with BBUs.

In the context of 5G-XHaul, it has been proposed to introduce a cross-connect between the BBUs and the client side of the OLT, as depicted in Figure 2-8. The WDM-PON system serves FH transmission by connecting the BBUs at the OLT with the RRHs attached to the ONUs, where the traffic flow of each RRH can be flexibly connected to a different BBU by changing the BBU-OLT transceiver connection in the cross-connect. The arrayed waveguide grating (AWG), as the RN that splits and routes individual wavelengths, should be located at the field close to all the RRHs. Alternatively, an add/drop line structure can be adopted, where an individual wavelength or group of wavelengths and be added and dropped at the distributed filter nodes along the trunk line. Both structures are depicted in Figure 2-8.

A single centralised wavelength locker at the OLT communicates with each ONU on a specific wavelength, such that each ONU is able to adaptively select its transmission wavelength to fit the connected filter port by employing an out-of-band communication channel [12]. Thus, instead of the individual wavelength locker in each tunable laser, all the attached ONUs share only one locker, which significantly saves the overall ONU cost.

It is also worth pointing out that the WDM-PON can in principle be used not only to support fronthaul but also BH services, as the inherent system transparency allows support of both types of services.

3 Data Plane – Converged Fronthaul Technologies/Services

In this chapter, we describe the details for FH services including BBU processing and functional splits relevant in the context of the demonstration activities. A discussion of optical technologies and the required extensions performed in order to support FH services (e.g. CPRI based) is also provided.

3.1 BBU Pool and RRH Integration

The FH link between the BBU and the RRH is based on an optical connection available through the ADVA WDM-PON. The BBU and the RRH come from TUD and AIR respectively. The main goal here is to showcase successful integration and testing between the RRH and the BBU through the WDM-PON.

3.1.1 Integration Objectives

As part of the integration planning work, a set of high level integration objectives were defined. These were aiming at providing a technology integration baseline over which full integration and detailed performance evaluation of the 5G-XHaul solution in the BIO testbed can be successfully performed. These objectives are summarised below:

- **Verify hardware compatibility:** Since the demonstrator comprises hardware originating from multiple project partners, the interfaces between these needed to be verified in order to ensure seamless integration capabilities. More specifically, the CPRI stream generated by the BBU needed to be successfully transferred to the WDM-PON transponder. After reception, it needed to be transferred to the RRH. Finally, the RF signal needed to be successfully received by the UE.
- **Testing hardware interworking:** Similarly, hardware compatibility in terms of mechanical and electrical specifications was also needed to be verified.
- **Testing off-site configuration:** The different hardware components to be integrated were developed and tested at individual 5G-XHaul partner's laboratories. Therefore, it was necessary to ensure that off-site operation was possible without the support of the corresponding lab infrastructures.
- **Demonstrate basic functionality:** Finally, end-to-end functionality needed to be demonstrated to verify the overall setup.

It should be noted that the final project demonstration planned and the associated results will be reported in D5.3.

3.1.2 Setup

Figure 3-1 shows the integrated experimental set-up comprising the BBU, the WDM-PON, and the RRH. A block diagram representation of the set-up is also shown in the same figure, to map the different functional blocks to the real components, as they appear in the experimental set-up. The experimental configuration includes the TUD's BBU that is connected to the AIR's massive RU through the ADVA'S WDM-PON transport link. The transponder receives the CPRI streams from the BBU in colourless grey wavelength channels, and converts them to DWDM wavelengths with 100 GHz spacing, which are later multiplexed into a single optical fibre. In this testbed, we use two C-band 10G SFP+ in the transponder to carry two independent CPRI streams at two different wavelengths. After demultiplexing at the remote node, two ONUs receive the individual CPRI streams and convert the DWDM wavelengths back to grey wavelength channels, feeding them to one of the available optical ports of the RRH. The RRH supports 8 x 8 antennas and incorporates Split A (as shown in Figure 2-1. For the uplink, each ONU uses a tuneable 10G SFP+, of which the uplink wavelength differs from the downlink wavelength although both are C-band wavelengths. Therefore, the upstreams are also transmitted over the same trunk fibre.

At the output of the RRH lies TUD's Universal Software Radio Peripheral (USRP) that serves as a UE receiver. With this experimental set-up we demonstrate a cellular downlink, where the BBU generates I/Q samples from 64 QAM constellation, which are then mapped onto the LTE subcarriers spanning over a bandwidth of 20 MHz. These IQ samples are then forwarded via the WDM-PON to the RRH employing the CPRI protocol. The RU recovers the LTE signal from the CPRI frames and performs antenna processing before upconverting the signal to the carrier frequency of 3.55 GHz. The radio signal is then sent to the antenna elements. In practice, the radio signal is transmitted wirelessly to the UE; however, in this demo we refrain from radiating the signal over the air due to licensing issues and hence we employed an RF cable to feed the signal to the UE.

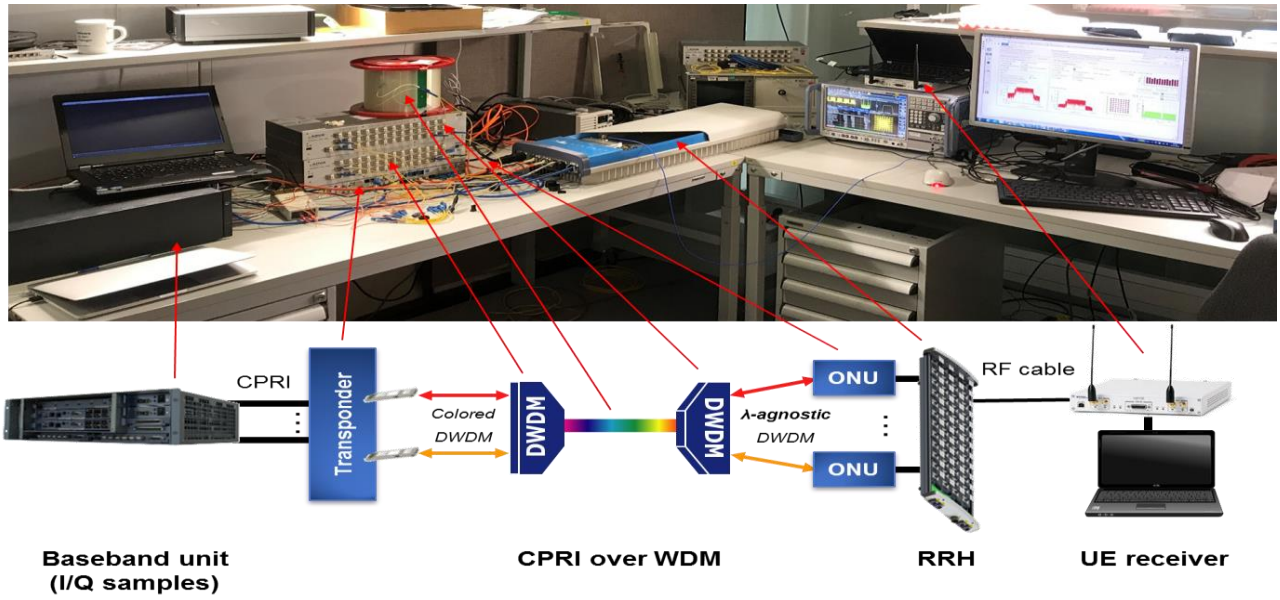

Figure 3-1: Joint integration testbed set up of BBU, WDM-PON and RRH.

The fronthaul link consist of the transponder and the ONU. The transponder receives the CPRI streams from the BBU and converts them into the coloured waveforms, which are later multiplexed into a single optical fibre. The ONU receives the individual CPRI streams that are being transported to one of the available ports of the RRH that support 8 x 8 antennas and incorporates Split A as mentioned above.

The radio unit prototype that is used in the integration experiments follows the high-level specification outlined in deliverable D4.12 [7]. In particular, the radio unit features a total of 96 transmit and receive chains (48 chains per polarisation). The device implements the Functional Split A, where mapping of IQ data coming from the base station onto all 96 transceivers is performed at the antenna. The BBU forwards IQ data to the RU via two CPRI links with line rate Option 5, which corresponds to a peak throughput of about 5 Gbps per link. Each CPRI link carries two polarisations of a separate 20 MHz LTE carrier (i.e. two IQ streams of a 20 MHz LTE) signal.

After reception at the radio unit, each IQ stream is multiplied with a complex weight and mapped onto 48 transmit chains. As described above we then capture the RF signal corresponding to one polarisation at a single antenna connector and feed it into the UE for demodulation.

3.1.3 Results

Figure 3-2 shows a snapshot of the GUI provided by the UE depicting several of the key parameters of the received signal. We have highlighted a few of them such as the received signal spectrum, received constellation diagram, carrier frequency and data rate against time. The peak power of the spectrum is about -70 dBm and the date rate is 11.33 Mbps.

We measure an error vector magnitude (EVM) of about 3% on both carriers, which corresponds to the exact value measured for the RF chain without the integration of the WDM-PON link into the transport. As can be seen in the spectrum of the received signal not all subcarriers are loaded.

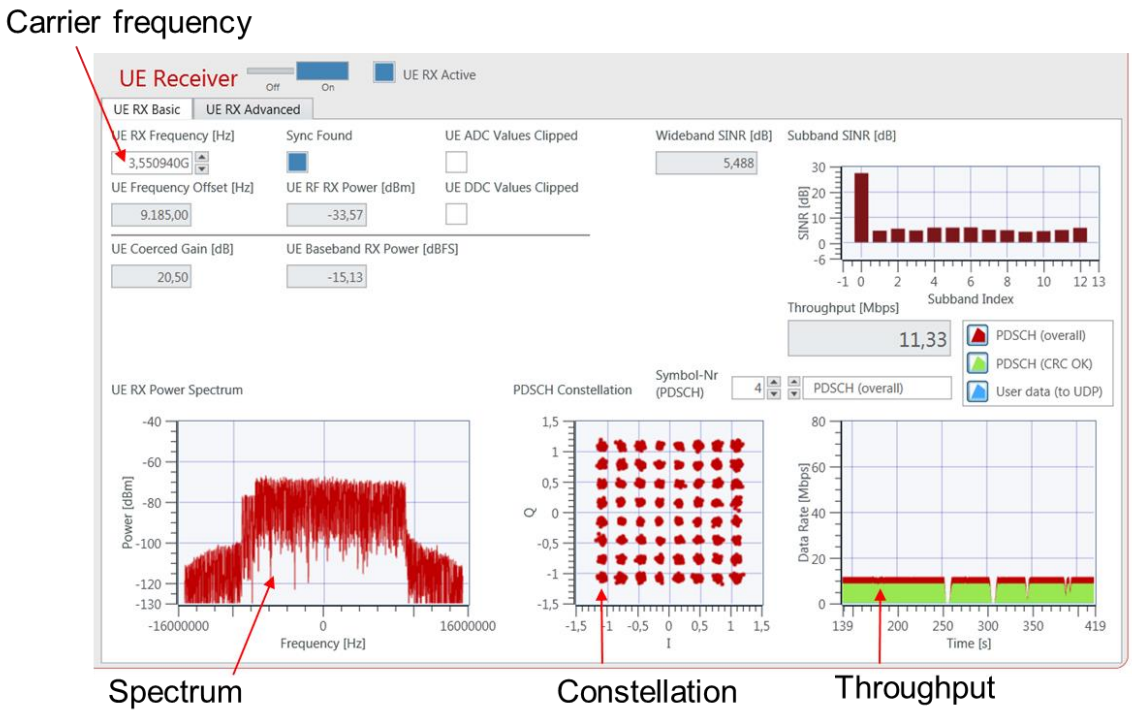

Figure 3-2: Snapshot of GUI of the UE highlighting received spectrum, constellation and throughput.

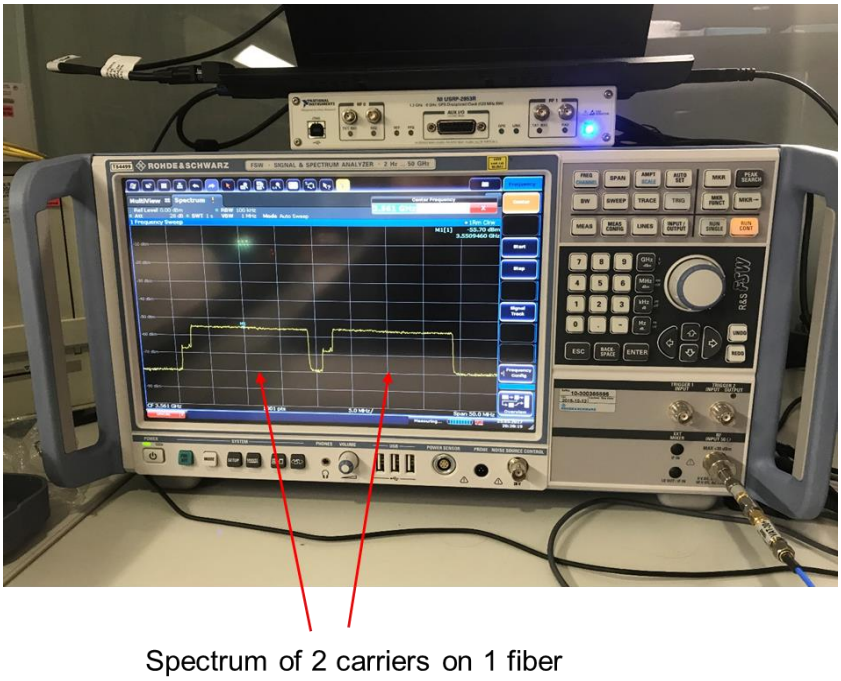

Figure 3-3: Spectrum analyser in the case that two separate CPRI streams.

Figure 3-3 shows the output of the spectrum analyser in the case that two separate CPRI streams are multiplexed by two WDM channels in the fronthaul. It demonstrates the multiplexing capability of the WDM-PON as it seamlessly transmits two carriers at frequencies 3.564 GHz and 3.568 GHz over a single fibre link.

Figure 3-4: Joint integration testbed demonstration at EuCNC.

In summary, we successfully integrated BBU, WDM-PON, RRH, and UE demonstrating the functionality as well as the interoperability of different interfaces, technologies, and hardware. This is, indeed, an important milestone on the road to full integration into the BIO testbed, which is the projects final integration objective. The aforementioned BBU, WDM-PON, and RRH integrated testbed was demonstrated at the 5G-XHaul exhibitor at EuCNC 2017 in Finland in June 2017 [13]. The relevant demonstration booth is shown in Figure 3-4.

3.2 TSON edge node fucntions with CPRI extension (Converged LTE and Optical)

As already discussed TSON supports Ethernet natively and can also transport CPRI as a FH service either natively or through packetised versions. In this context, it should be noted that a Next Generation Fronthaul Interface (NGFI) based on additional functional splits that provide a range of trade-offs between transport requirements and centralisation gains is being defined in IEEE 1904.3. In case that the future NGFI interface is packetised using Ethernet framing, it will be also natively supported by TSON.

Figure 3-5 shows the CPRI frame structure which sends sampled in-phase quadrature (IQ) data in a frame format. The CPRI radio frame is 10 ms. CPRI line rate information is sent in Z.Y.W.X format between Radio Unit (RU) and Baseband Unit (BBU), where Z is the hyper frame number, Y is the basic frame within a hyper frame, W is the word number within a basic frame, and X is the byte number within a word. A single basic frame duration is 260 ns (1/3.84 MHz) which is compatible to a Universal Mobile Telecommunications System (UMTS) chip length. Each basic frame consists of 16 words, and the word length depends on the CPRI line rate: 256 basic frames make a hyper frame, and 150 hyper frames make a radio frame. CPRI supports topologies such as tree, ring, and chain, each link between RU and BBU is a fixed-bandwidth time-division-multiplexed (TDM) connection.

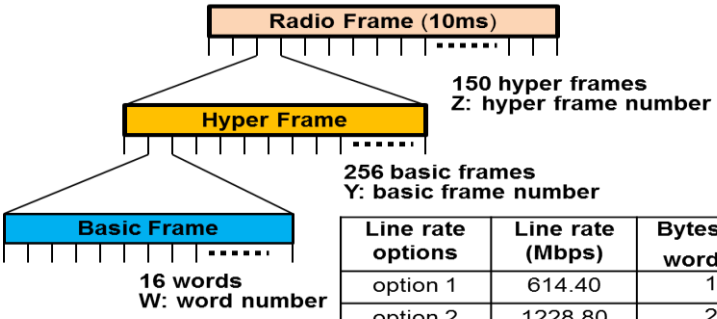

Line rate options	Line rate (Mbps)	Bytes per word (X)
option 1	614.40	1
option 2	1228.80	2
option 3	2457.60	4
option 4	3072.00	5
option 5	4915.20	8
option 6	6144.00	10
option 7	9830.40	16
option 7A	8110.08	16
option 8	10137.60	20
option 9	12165.12	24
option 10	24330.24	48

Figure 3-5: CPRI Frame Structure.

Figure 3-6: HG CPRI module.

TSON's extension to enable CPRI can support up to line rate option 6 with current implementation using Vita57.1 HiTech Global (HG) CPRI daughter card as show in Figure 3-6. Vita57.1 is an OBSAI/CPRI or 10G/40G Ethernet FPGA Mezzanine Card (FMC) module. It is compatible with any Vita57 compliant FPGA carrier board. This FMC module provides access to one QSFP+ (40G) and two SFP+ (10G) ports for Gigabit Ethernet applications. Moreover, the module supports two different frequencies such as 156.25 MHz, and 153.60 MHz with crystal oscillator to make the module frequency compatible with the Xilinx CPRI IP-core [14].

Figure 3-7 shows the possible TSON extension with the CPRI module interface, which can support both the RU and the BBU (i.e., as Slave and Master). All functions performed by the different layers (e.g., PHY and MAC) involved in transporting CPRI frames are designed and implemented in a NetFPGA SUME board equipped with Vertix-7 FPGA. As shown in Figure 3-7, the Anritsu traffic analyser (MT1100A) is used as the CPRI traffic generator and monitor to test the implemented design in-loop back mode.

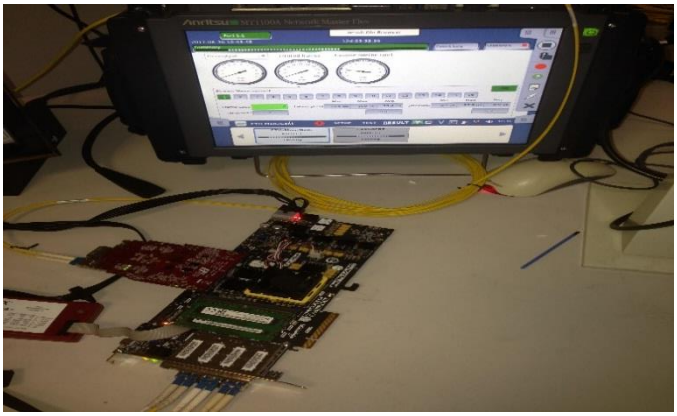

Figure 3-7: TSON extension with CPRI module in house setup.

Table 3-1: TSON + CPRI (as a BBU) on NetFPGA SUME Board.

Resource	Utilisation	Available	Utilisation %
FF	36716	866400	4.24
LUT	23955	433200	5.53
Memory LUT	929	174200	0.53
I/O	64	850	7.53
BRAM	195.50	1470	13.30
BUFG	12	32	37.50
MMCM	5	20	25.00
GT	4	45	8.89

Table 3-2: TSON + CPRI (as a RU) on NetFPGA SUME Board.

Resource	Utilisation	Available	Utilisation %
FF	40330	866400	4.65
LUT	26605	433200	6.14
Memory LUT	1007	174200	0.58
I/O	64	850	7.53
BRAM	199	1470	13.54
BUFG	17	32	53.13
MMCM	6	20	30.00
GT	5	45	11.11

Table 3-1 and Table 3-2 shows the pre-synthesis evaluation report by designing and implementing the TSON and the CPRI designs together as a single design (in case of both RU and BBU with Option 6), and it confirms that the TSON extension with the CPRI module are successfully designed and implemented in VHDL on low-cost FPGA board.

4 Data Plane- Converged Wireless Technologies/Services

This section describes the 5G-XHaul mmWave and Sub-6 technologies and their integration in support of BH services.

4.1 mmWave and Sub-6 for Backhaul Services

4.1.1 mmWave Evaluation

The Typhoon module has undergone initial testing in May following the delivery of the first chip samples from IDT. Further testing is ongoing and more time is needed before full functionality and performance is achieved. An example of a board in a test rig is shown in Figure 4-1.

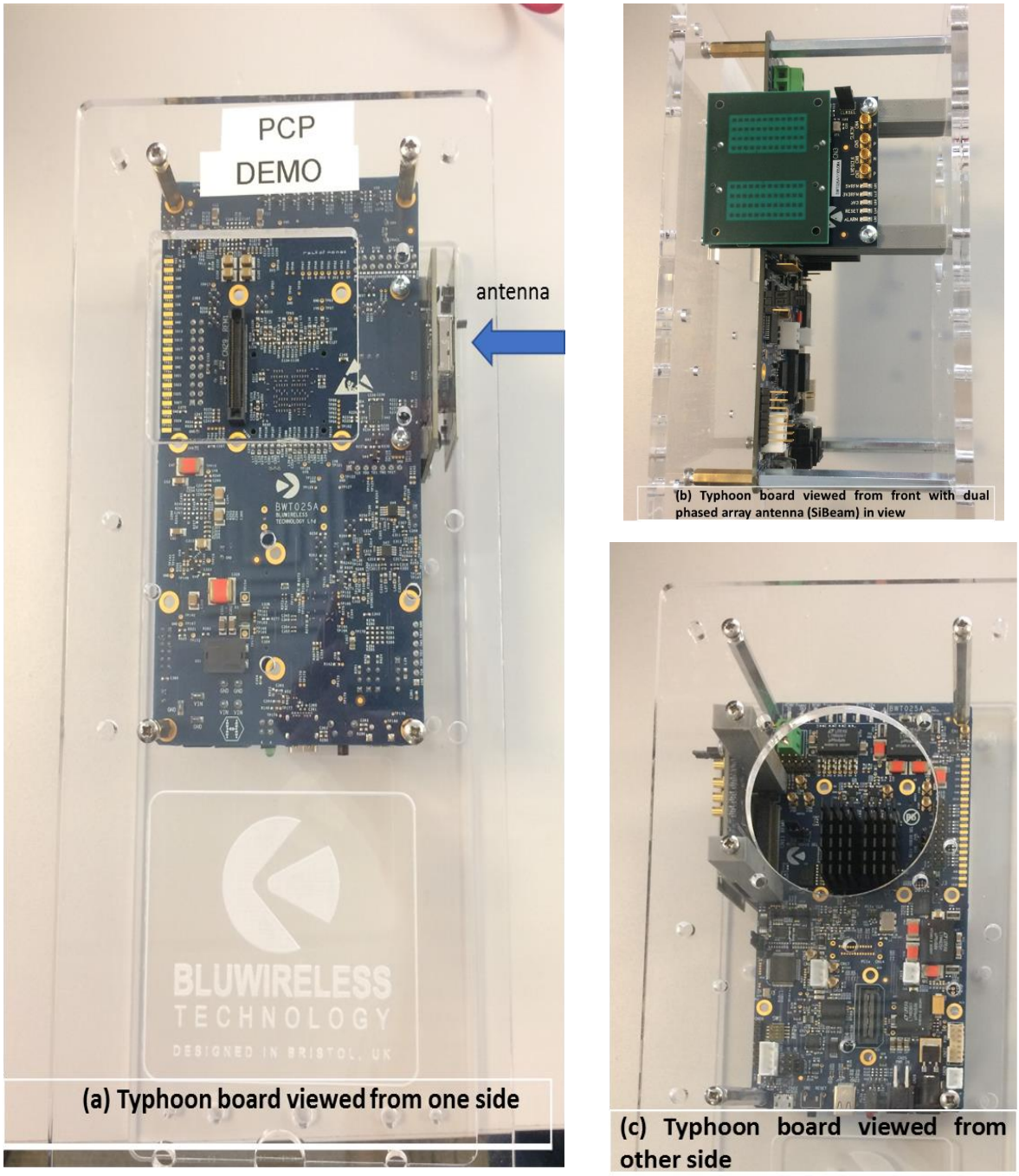

Figure 4-1: Typhoon board during testing.

In a unidirectional test, a throughput of 3.07 Gbps was achieved using a UDP data stream generated using *iperf* and MCS11. The photo of the setup and the screen shot of the received data rate are shown in Figure 4-2 and Figure 4-3 respectively. This test was carried out over the air (OTA) with a span of approximately 1 metre. Received bytes were measured every second and used to calculate the per second throughput value.

Results from the evaluation of the Typhoon technology when deployed in the BIO network will be reported in D5.3.

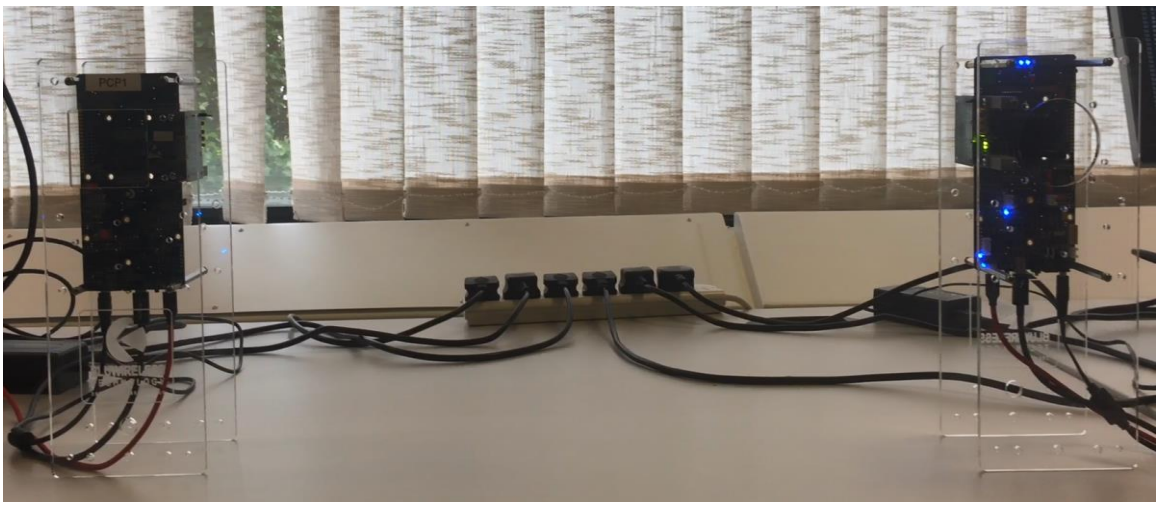

Figure 4-2. Typhoon modules being used to demonstrate a unidirectional link at 3 Gb/s.

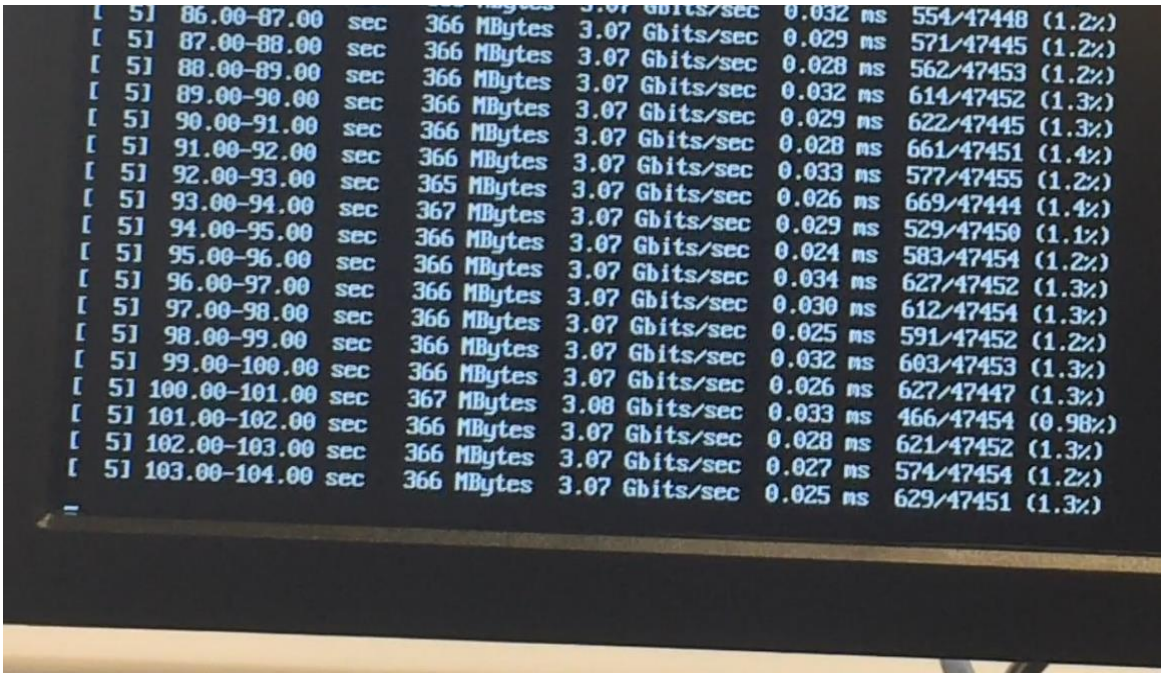

[5]	86.00-87.00	sec	366 MBytes	3.07 Gbits/sec	0.032 ms	554/47448 (1.2%)
[5]	87.00-88.00	sec	366 MBytes	3.07 Gbits/sec	0.029 ms	571/47445 (1.2%)
[5]	88.00-89.00	sec	366 MBytes	3.07 Gbits/sec	0.028 ms	562/47453 (1.2%)
[5]	89.00-90.00	sec	366 MBytes	3.07 Gbits/sec	0.032 ms	614/47452 (1.3%)
[5]	90.00-91.00	sec	366 MBytes	3.07 Gbits/sec	0.029 ms	622/47445 (1.3%)
[5]	91.00-92.00	sec	366 MBytes	3.07 Gbits/sec	0.028 ms	661/47451 (1.4%)
[5]	92.00-93.00	sec	365 MBytes	3.07 Gbits/sec	0.033 ms	577/47455 (1.2%)
[5]	93.00-94.00	sec	367 MBytes	3.07 Gbits/sec	0.026 ms	669/47444 (1.4%)
[5]	94.00-95.00	sec	366 MBytes	3.07 Gbits/sec	0.029 ms	529/47450 (1.1%)
[5]	95.00-96.00	sec	366 MBytes	3.07 Gbits/sec	0.024 ms	583/47454 (1.2%)
[5]	96.00-97.00	sec	366 MBytes	3.07 Gbits/sec	0.034 ms	627/47452 (1.3%)
[5]	97.00-98.00	sec	366 MBytes	3.07 Gbits/sec	0.030 ms	612/47454 (1.3%)
[5]	98.00-99.00	sec	366 MBytes	3.07 Gbits/sec	0.025 ms	591/47452 (1.2%)
[5]	99.00-100.00	sec	366 MBytes	3.07 Gbits/sec	0.032 ms	603/47453 (1.3%)
[5]	100.00-101.00	sec	367 MBytes	3.08 Gbits/sec	0.026 ms	627/47447 (1.3%)
[5]	101.00-102.00	sec	366 MBytes	3.07 Gbits/sec	0.033 ms	466/47454 (0.98%)
[5]	102.00-103.00	sec	366 MBytes	3.07 Gbits/sec	0.028 ms	621/47452 (1.3%)
[5]	103.00-104.00	sec	366 MBytes	3.07 Gbits/sec	0.025 ms	574/47454 (1.2%)
[5]			366 MBytes	3.07 Gbits/sec	0.025 ms	629/47451 (1.3%)

Figure 4-3. Screen shot of received data rate.

4.1.2 Sub-6 experimental evaluation

In deliverable D4.11 [15] the 5G-XHaul Sub-6 BH platform was presented, which is based in off-the-shelf 802.11ac modems, coupled with a set of software extensions and optimisations. An initial data-plane evaluation of this solution was described in deliverable D4.11 for an indoor environment. In this section we extend the performance evaluation presented in D4.11 with an evaluation in an outdoor environment. In addition, the tests performed in D4.11 considered using omnidirectional antennas in the various Sub-6 modems embedded in the BH unit, which resulted in throughput degradation when two or more modems operated simultaneously. To address this fact, the outdoor experiments have been performed using directional antennas with an antenna

gain of 23 dBi with vertical/horizontal beam width of 10º at -3dB. These antennas are commonly used in outdoor BH deployments.

Figure 4-4 illustrates the experimental setup. Three Sub-6 BH nodes are deployed along an outdoor corridor at the UPC campus over a distance of 50 metres, representing a typical small cell BH deployment as the ones described in deliverable D2.4 [16]. The Sub-6 nodes are mounted on a ladder at approximately two metres from the floor, as illustrated in the photos shown in Figure 4-4. Three different test configurations are considered, namely Relay mode, Sink mode and Source mode. These configurations are shown in Figure 4-5.

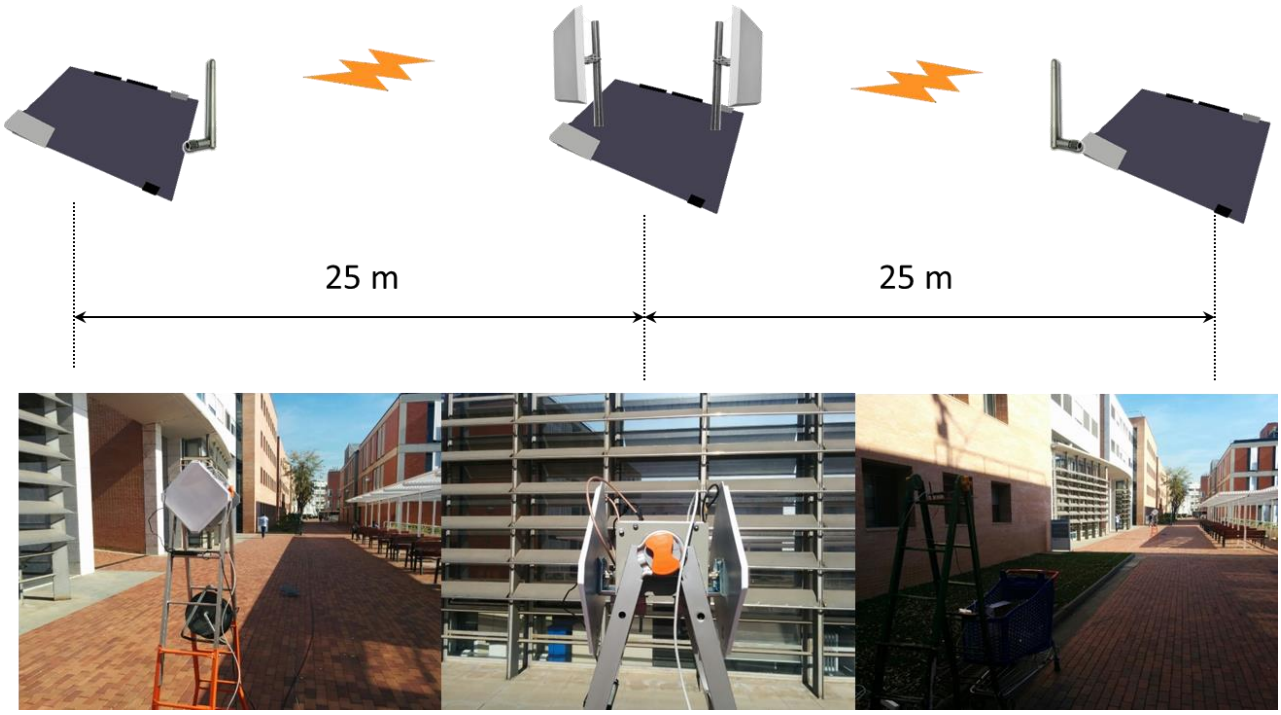

Figure 4-4: Sub-6 data-plane performance experiment set up.

A critical aspect to consider when evaluating the performance of the Sub-6 devices is whether the two modems in the middle node interfere with each other. Therefore, performance is analysed when configuring the two links in the middle node in non-overlapping radio channels. Recall from D4.11 [15] that when using omnidirectional antennas a strong interference between collocated modems was observed even when the modems were configured at non-overlapping channels, due to near field effects. Like in D4.11, the Sub-6 modems in this experiment are based on QCA9882 chipsets implementing MIMO 3x3 IEEE 802.11ac, and are configured to operate with a channel width of 80 MHz. Hence, the relay, sink and source mode experiments are repeated while configuring the left link in Figure 4-4 on channel 52, while the right link is subsequently configured on channels 100, 116, 132 and 149. The interested reader is referred to D4.11 [15] for a detailed explanation on the channelisation available for the 5G-XHaul Sub-6 devices.

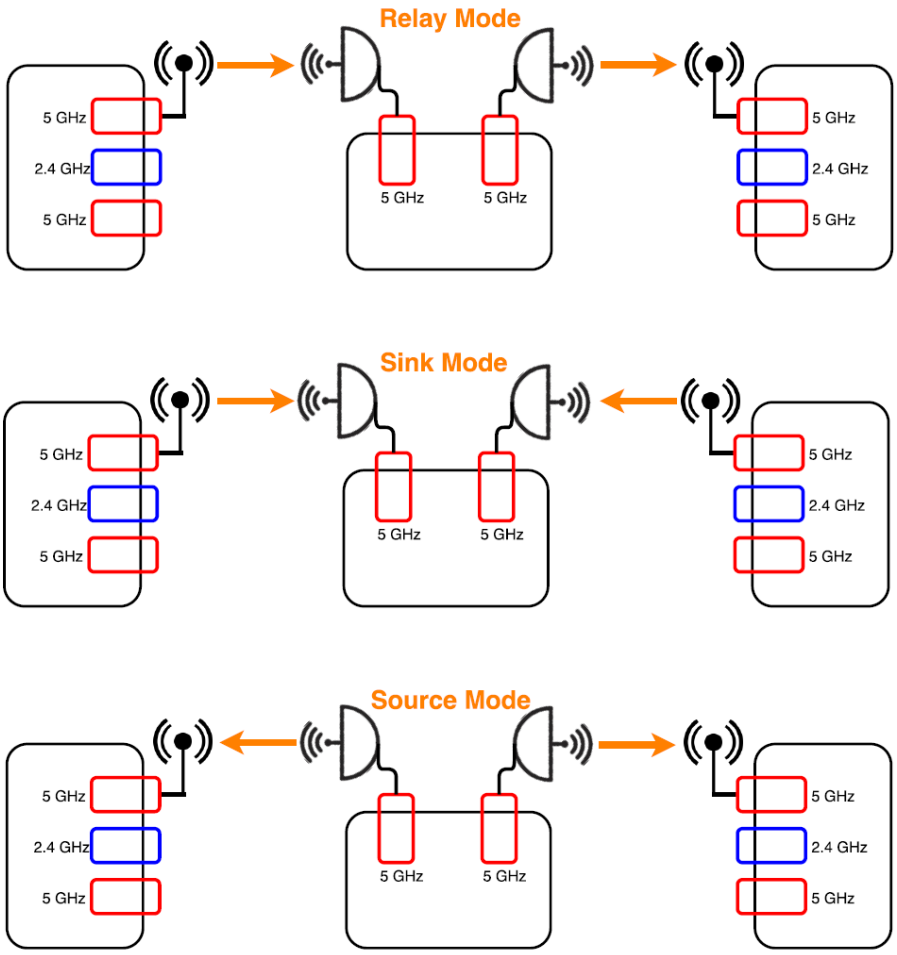

Figure 4-5: Sub-6 Experiment configurations.

To evaluate the data-plane performance at the application level an *iperf* transmission that saturates the channel is launched between the left and right Sub-6 nodes in Figure 4-4. Figure 4-6 depicts the data-plane performance observed in the relay mode experiment, when using directive (left) and omnidirectional (antennas). In Figure 4-6 the dark and red markers represent the throughput performance of the right and left links in Figure 4-4, and the orange markers represent the aggregate data rate being forwarded through the Sub-6 middle node. When using directive antennas (left) the two links achieve a performance slightly above 250 Mbps, which corresponds to the performance of a single link when operating in isolation, as demonstrated in deliverable D4.11 [15]. Therefore, the aggregate throughput forwarded by the relay node is slightly above 500 Mbps. In addition, the isolation between the two links is maintained for all considered channel configurations. However, when omnidirectional antennas are used, near field effects manifest, and the two collocated links interfere heavily, resulting in the throughput of each link dropping to values close to 50 Mbps. Interference slightly reduces when the channel separation between the two collocated links increases, but is severe for all combinations of channel configurations.

Figure 4-7 depicts the performance obtained in the sink mode (left) and source mode (right) experiments when using directive antennas. In both cases directive antennas deliver the required link isolation, and the two modems in the middle node of Figure 4-4 operate close to their optimal performance, resulting in an aggregate data-rate around 500 Mbps. We observe a slight performance degradation in sink mode, as compared to the source mode and relay mode experiments. We attribute this degradation to an increased Frame Error Rate (FER) that occurs when both modems have to decode a data-frame at the same time.

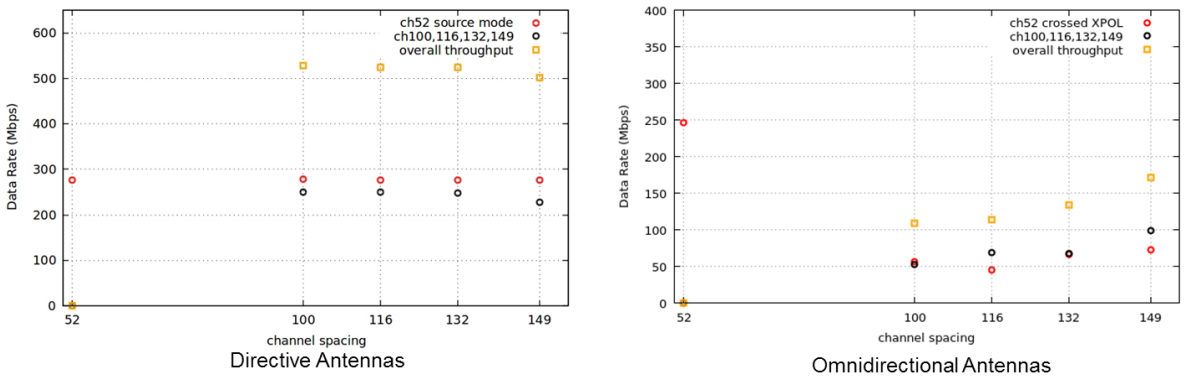

Figure 4-6: Relay mode experiments with directive (left) and omnidirectional (right) antennas.

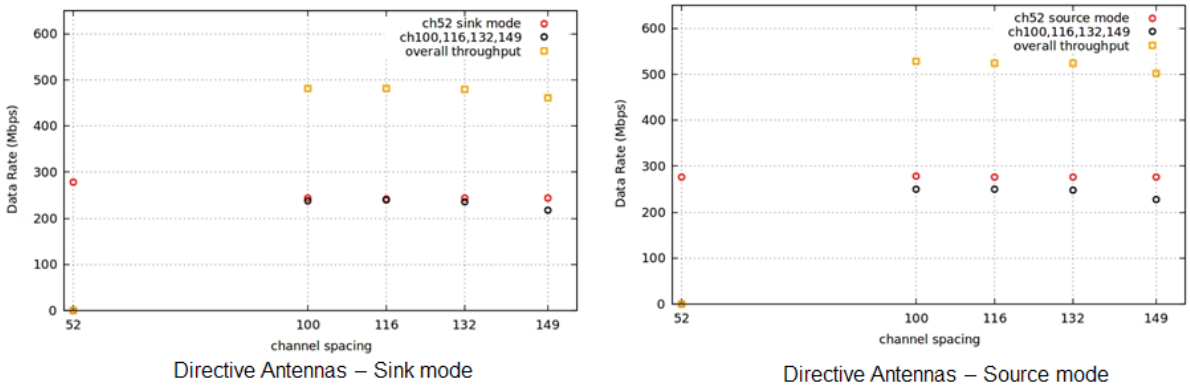

Figure 4-7: Sink mode (left) and Source (mode) experiments with directive antennas.

With a link performance around 250 Mbps and aggregate data rates of 500 Mbps at distances of 50 metres, we consider that the 5G-XHaul Sub-6 devices provide an adequate performance for the Small Cell wireless BH deployment scenarios described in deliverable D2.4 [16]. Recall that in the 5G-XHaul architecture, Sub-6 wireless BH is used to complement the high capacity mmWave links, while offering NLoS capabilities.

4.1.3 Sub-6 mmWave interfacing

As described in deliverable D2.2 [3], mmWave and Sub-6 5G-XHaul nodes are interfaced following a bridging model. Different implementations are possible depending on whether the two devices are collocated or not, as depicted in Figure 4-8.

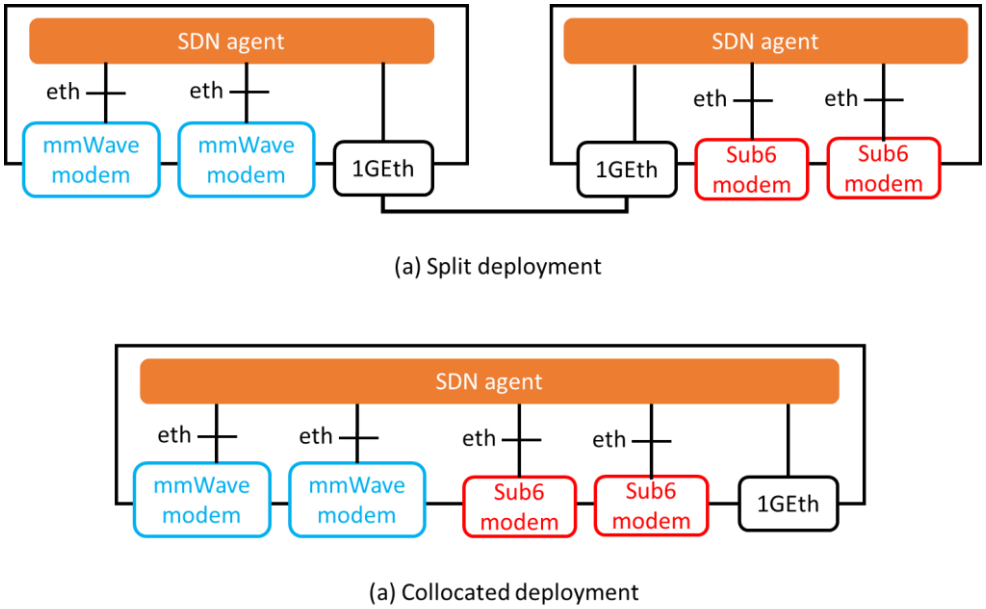

Figure 4-8: Interfacing options between 5G-XHaul mmWave and Sub-6 devices.

Note in Figure 4-8 how both mmWave and Sub-6 interfaces provide an Ethernet abstraction, and are integrated through an SDN agent. In the experimental demonstrations described in this deliverable and in deliverable D5.1 [17] the SDN agent function is implemented in software, based on the Open vSwitch project [19], which has been shown to achieve data rate performance up to 10 Gbps [18]. If mmWave and Sub-6 interfaces are not collocated in the same device, then an Ethernet interface can be used to provide data-plane connectivity.

5 Data Plane- Converged Active and Passive Optical Techologies/Services for both FH and BH

In this chapter, we describe the integration of the active and passive optical network solutions developed in 5G-XHaul with the aim to jointly support BH and FH services. This work has been reported in [20].

5.1 TSON-WDM PON integration

As already discussed in a 5G network, the combination of active and passive optical transport technologies can provide the required capacity and flexibility to provision both FH and BH services. Therefore, to address the high bandwidth and low-latency connectivity requirements, 5G-XHaul has proposed a flexible hybrid active and passive solution. The TSON approach is considered for the active technology [21], and the passive solution adopts a WDM PON [22] adopting low-cost tuneable micro-electromechanical system (MEMS) vertical-cavity surface-emitting lasers (VCSELs), to provision jointly optical BH and FH services.

As part of the 5G-XHaul demotration activities we have experimentally demonstrated that a 5G infrastructure deploying a suitable optical transport solution is able to support both FH and BH services. A bidirectional 10 GbE transmission is undertaken over a dark fibre ring of the Bristol City Network BIO Infrastructure. Our experimental results showed that the additional latency introduced by the TDM-based reframing process in the TSON nodes, and the performance of tuneable MEMS-VCSEL can still fulfil the stringent FH delay requirements.

5.1.1 Backhaul and Fronthaul Architecture

Figure 5-1 shows the TSON solution where the TSON edge nodes are used to interface multiple technology domains (e.g. wireless, PON and DCs), while TSON core nodes are used to switch optical frames to the wavelength selective output utilizing fast-optical switching technology (e.g. PLZT [21]). The WDM-PON provides flexible FH connections, between RUs at the antenna side and BBUs at the central office (CO), where the key component for a feasible low-cost implementation is the tuneable laser at the remote interface. Therefore, we propose adopting a MEMS-VCSEL at the optical network unit (ONU), which is capable of 10 Gbps transmission over up to 20 km single-mode fibre (SMF).

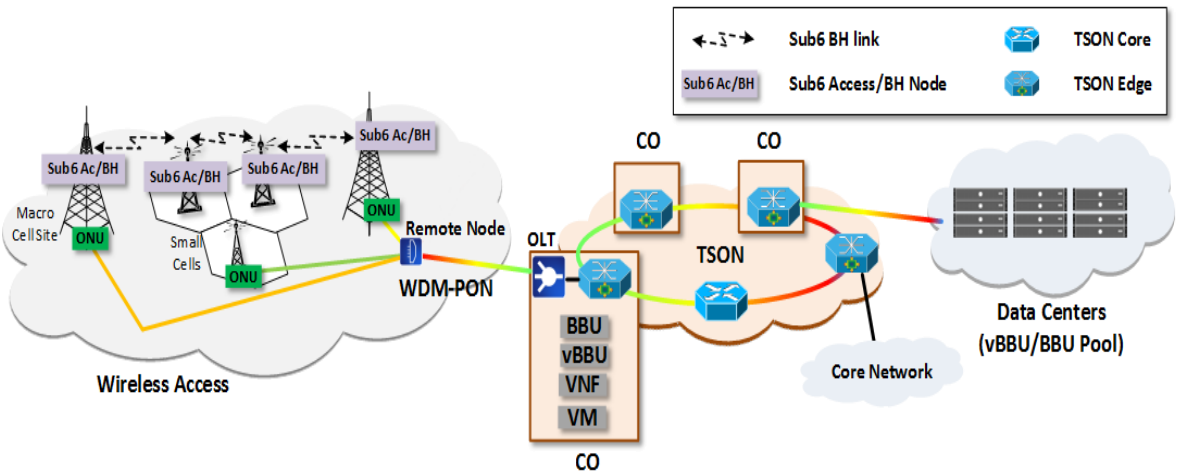

Figure 5-1: The role of TSON and WDM-PON technologies in the 5G-XHaul project.

5.1.2 Testbed Setup and Implementation

Figure 5-2 shows the integration of TSON and WDM-PON technologies for optical FH and BH services. In the TSON network, two nodes perform both ingress and egress functionalities based on the direction of the traffic. The TSON ingress node is responsible for receiving data traffic, and generating the time-sliced optical burst traffic based on the selected time-slice duration (e.g., 10 µs). The TSON egress node reconstructs the original information. The TSON solution is implemented on the NetFPGA SUME platform. The default SUME FPGA

board supports 4 optical small-form factor pluggable (SFP+) transceivers at 10 Gbps line rate. In this demonstration, we used 3 SFP+ interfaces in each TSON node, two SFP+ (1310 nm) for data and control traffic interfaces, and one SFP+ (1550.43 nm) for interconnection between TSON nodes. A Software Defined Networking (SDN)-enabled TSON-control interface is supported to change flexible TSON functionalities (e.g., wavelength switching, time-slice duration, and variable bit rates) on the fly [23].

In the optical line terminal (OLT), a low-latency cross-connect switch not only converts the grey interface (1310 nm) from the TSON egress port to the L-band DWDM light, but also flexibly assigns the connectivity of remote ONUs. For a proof of concept demonstration, only one bidirectional DWDM channel over the dark fibre of the city network is implemented, and the de-/multiplexer at the remote node (RN) is omitted.

As shown in Figure 5-2, the prototyped ONU consists of one tuneable VCSEL SFP+ (Bandwidth10 Inc.) working in the C-band for the upstream link with a tuneable range of 13 nm and 10 Gbps transmission capacity (Figure 5-2 inset: optical spectrum of 16 channels), and the transponder interfaces between the grey light and C-band. The tuneable VCSEL is a much lower cost option than the ones used in other commercially available tuneable SFP+, due to its simpler tuning and testing (1 input instead of 3+ inputs used in tuneable edge emitters), as well as simpler epitaxy and fabrication processes. More details can be found in [24]. The module also has integrated an embedded communication channel for receiving the control signal from the OLT and responding to its commands to find the edge of the optical filter, and then fine tune the laser wavelength to the centre of the band. The much lower cost and power consumption of a VCSEL-based tuneable SFP+ make it highly suitable for the FH and access networks.

To compensate for the chirp induced by the VCSEL, a dispersion compensating fibre (DCF) with chromatic dispersion factor of -339 ps/nm is used in the uplink regardless of transmission distances (i.e., 8, and 16 km), while the EDFA is used only for the transmission of 16 km. It is important to mention that the cost of EDFA and DCF can be shared among all ONUs, thus still remaining low-cost overall.

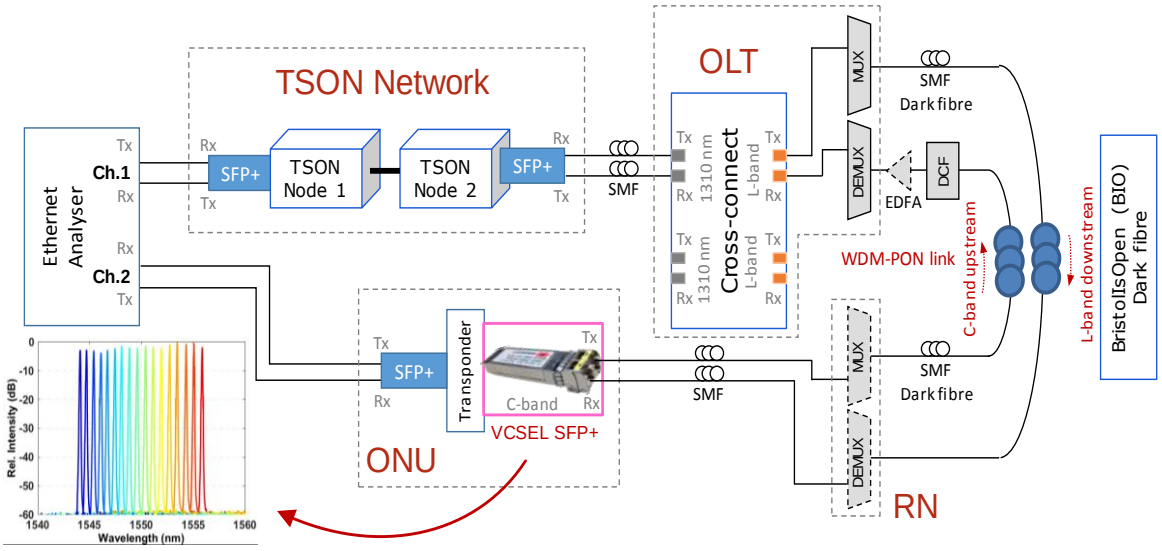

Figure 5-2: Testbed configuration of TSON and WDM-PON Integration using BIO dark fibre.

5.1.3 Experimental Results

For the experimental evaluation three different scenarios are considered. The first scenario includes both FPGAs and WDM-PON setups without the optical fibre (back-to-back). In the second and third scenarios, the proposed technologies are evaluated over the BIO dark fibre with 8 km and 16 km of standard single-mode fibre (SSMF) and optical switches between RN and OLT to investigate the performance of FH services (Figure 5-2.

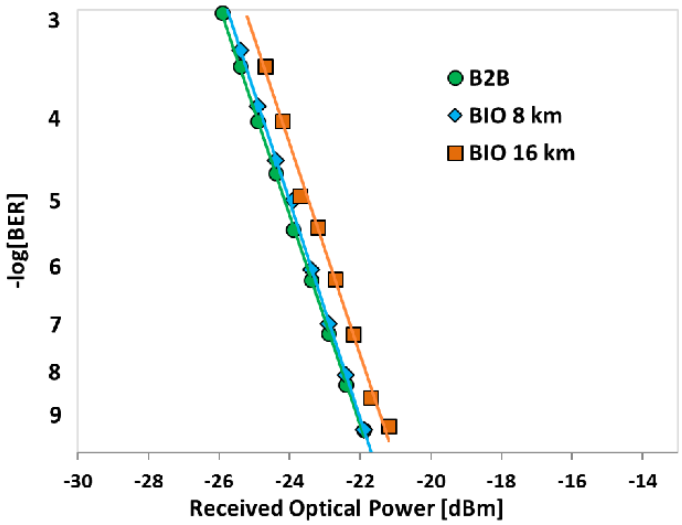

Figure 5-3: Downstream BER measurements.

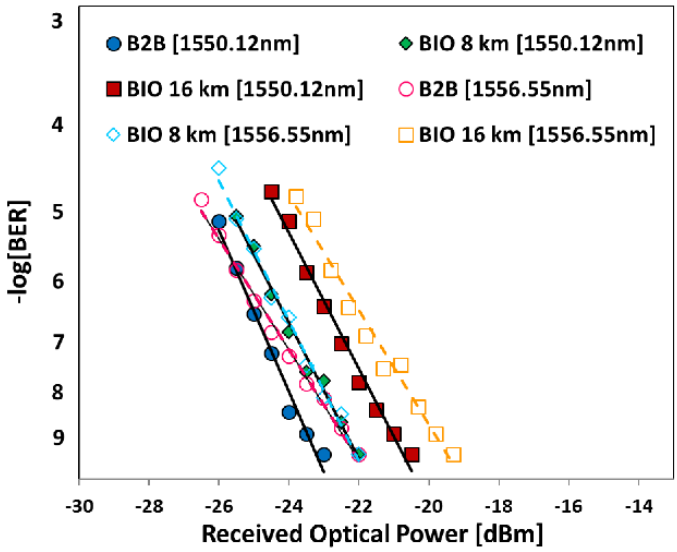

Figure 5-4: Upstream BER measurements.

A traffic analyser generates/receives the Ethernet traffic to/from the NetFPGA NIC/ONU at 8.6 Gbps with fixed frames of 1500B length. The performance parameters under consideration include bit error rate (BER) and latency. The latency is defined as the time difference between arrival of a frame at the analyser, and its departure from the analyser.

Figure 5-3 shows the downstream BER measurements as a function of received optical power at the MEMS-VCSEL SFP+ for the different considered scenarios. The BER curves shows that the penalty observed comparing the B2B performance to the case of 8 km of SSMF transmission over the BIO infrastructure is negligible. A penalty of < 1dB is observed for the case of 16 km transmission.

Figure 5-4 shows the BER curves for different upstream wavelengths (C-band) as a function of received optical power at the cross-connect switch, for the considered scenarios in the upstream direction. The BER performance of different upstream wavelengths appears slightly inconsistent, because in the experiment, the VCSEL wavelength has not been locked, leading to misalignments with respect to the DEMUX window. A 3dB power penalty is observed in the 16 km case, due to the increased noise level from the EDFA. Figure 5-5 shows the upstream latency measurement of the scenarios considered. The upstream includes a DCF, which introduces an additional delay of around 19 µs. About 33 µs of the latency is measured within the FPGA, which includes

physical and logic processing. Note that the delays can vary depending on the frame length. WDM-PON system (MUX/De-MUX, OLT, RN, ONU) latency is measured around 0.5 µs. The remaining delay is the propagation delay in optical fibre depending on the length. Downstream delays are similar to upstream delays, but without the DCF contribution.

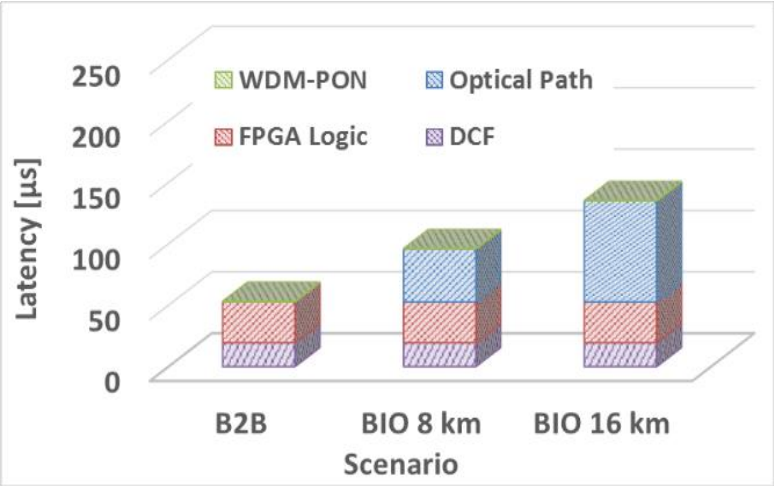

Figure 5-5: Upstream Latency measurements.

The measured latency in both downstream and upstream cases is lower than the latency budget defined in 3G-PPP TR 38.801. This indicates that combining active and passive technologies can help to meet the strict latency requirements of FH services.

In conclusion, this work demonstrated experimentally that flexibility in 5G networks can be achieved utilizing integrated active and passive optical technologies for transport. The results showed that frame-based optical network technology can help to meet high bandwidth and low latency 5G requirements integrating flexible VCSEL-based passive WDM technology. For the downstream scenario, negligible power penalty was observed in the BER measurements, for 8 and 16 km over the Bristol city dark fibre infrastructure. For the upstream case, penalties < 3 dB were obtained, for the 8 km and 16 km of dark fibre and for different wavelengths.

6 Summary and Conclusions

WP5 is the work package responsible for the demonstration activities of the project. The relevant work involves implementation of the testbed facility for the integration and validation activities. The testbed design is driven by the use-cases and architecture specification and the technology developments of the technical work packages. The overall 5G-XHaul solution will be validated over the UNIVBRIS testbed including the experimental testbed available at the HPN laboratory and the Bristol smart city test-bed available through BIO.

In this context, deliverable D5.2 is reporting on the deployment and tests of RAN services over the integrated optical-wireless BH and FH solution. The testbed infrastructure is based on a hybrid optical transport integrating a dynamic frame based optical network technology relying on TSON and WDM PONs. In terms of wireless technologies, 5G-XHaul demonstration activities focuses on mmWave and Sub-6 solutions and their integration. Relevant work and test results on these technologies are presented. In addition, this deliverable reports on the technology extensions carried out to enable the support of FH and BH services by the hybrid optical transport. Successful integration of passive and active optical network technologies and a set of relevant results demonstrating the feasibility of joint BH and FH services through the 5G-XHaul infrastructure are also reported.

7 References

[1] H2020 Project 5G-XHaul, Deliverable 2.1, “Requirements Specification and KPIs Document”, November 2015.

[2] A. Tzanakaki et al., “Wireless-Optical Network Convergence: Enabling the 5G Architecture to Support Operational and End-User Services”, IEEE Commun. Mag., August 2017.

[3] H2020 Project 5G-XHaul, Deliverable 2.2 “System Architecture Definition”, July 2016 [Online]: http://www.5g-xhaul-project.eu/download/5G-XHaul_D2_2.pdf.

[4] H2020 Project 5G-XHaul, Deliverable 2.3, “Architecture of Optical/Wireless Backhaul and Fronthaul and Evaluation”, December 2016.

[5] J. Bartelt et al., „5G transport network requirements for the next generation fronthaul interface”, EURASIP Journal on Wireless Communications and Networking, vol. 2017, no. 1, 2017, under Creative Commons Attribution 4.0 International License http://creativecommons.org/licenses/by/4.0/

[6] Common Public Radio Interface, http://www.cpri.info/. Accessed July. 1, 2017

[7] H2020 Project 5G-XHaul, Deliverable 4.12, “Advanced Antenna System with Integrated L1 Processing”, December 2016.

[8] H2020 Project 5G-XHaul, Deliverable 4.6, “Real time implementation of advanced MIMO algorithms in BWT DP1 platform”, September 2016.

[9] H2020 Project 5G-XHaul, Deliverable 4.7, “Test results from field trial, real time algorithms in BWT DP1 platform”, December 2016.

[10] H2020 Project 5G-XHaul, Deliverable 4.5, “Extended 60 GHz Matlab simula-tor and incorporation of new algorithms”, September 2016.

[11] https://www.idt.com/products/interface-connectivity/millimeter-and-microwave-solutions-mmwave/rwm6050-rapidwave-baseband-modem

[12] C. Wagner et al., “Impairment Analysis of WDM-PON Based on Low-Cost Tunable Lasers,” J. Lightw. Technol., 34, 5300-5307, 2016.

[13] EuCNC demo, http://www.eucnc.eu/?q=node/134

[14] Xilinx, CPRI IP Core, https://www.xilinx.com/products/intellectual-property/do-di-cpri.html

[15] H2020 Project 5G-XHaul, Deliverable 4.11, “Wireless backhauling using Sub-6 GHz systems”, December 2016.

[16] H2020 Project 5G-XHaul, Deliverable 2.4, “Network Topology Definition”, January 2017.

[17] H2020 Project 5G-XHaul, Deliverable 5.1, “Evaluation of SDN functionalities over heterogeneous RAN tech-nologies at UTH testbed”, November 2015.

[18] Emmerich, Paul, et al. "Performance characteristics of virtual switching." Cloud Networking (CloudNet), 2014 IEEE 3rd International Conference on. IEEE, 2014.

[19] “OpenFlow switch specification v1.5.1,” April 2015. [Online]. Available: https://www.opennetworking.org/sdn-resources/technical-library.

[20] K. Kondepu et al., “Performance Evaluation of Next-Generation Elastic Backhaul with Flexible VCSE based WDM Fronthaul”, Proc. IEEE/OSA the European Conference on Optical Communication (ECOC), Gothenburg, 2017.

[21] Y. Yan. et al, “FPGA-based Optical Network Function Programmable Node”, in Proc. OFC (2014).

[22] J. zou. et al, “Optical Fronthauling for 5G Mobile: A Perspective of Passive Metro WDM Technology”, in Proc. OFC (2017).

[23] H2020 Project 5G-XHaul, Deliverable 3.1, “Analysis of state of the art on scalable control plane design and techniques for user mobility awareness. Definition of 5G-XHaul control plane requirements”, July 2016.

[24] C. Chase. et. al, “Tunable 1550nm VCSELs using high-contrast grating for next-generation networks,” Proc. SPIE 9008 (2014).

8 Acronyms

Acronym	Description
5G	Fifth Generation Networks
AAS	Advanced Antenna System
ADC	Analogue-to-Digital Converter
AFE	Analogue Front-End
AWG	Arrayed Waveguide Grating
BB	Baseband
BBU	Baseband Unit
BER	Bit Error Rate
BH	Backhaul
BIO	Bristol is Open
BS	Base Station
CPRI	Common Public Radio Interface
C-RAN	Cloud Radio Access Network (aka Cloud-RAN)
CO	Central Office
DAC	Digital-to-Analogue Converter
DCF	Dispersion Compensating Fibre
EDFA	Erbium Doped Fibre Amplifier
EVM	Error Vector Magnitude
FH	Fronthaul
FPGA	Field Programmable Gate Array
IQ	In-phase Quadrature-phase
KPI	Key Performance Indicator
LTE	Long Term Evolution
LUT	Lookup Table
MAC	Medium Access Control
MEMS	Micro-Electromechanical Systems
MIMO	Multiple-Input Multiple-Output
mmWave	Millimetre Wave
NGFI	Next Generation Fronthaul Interface
OBSAI	Open Base Station Architecture Initiative
OLT	Optical Line Terminal
ONU	Optical Network Unit
P2P	Point-to-Point
PoE	Power over Ethernet

PON	Passive Optical Network
PHY	Physical layer
RFIC	Radio Frequency Integrated Circuits
RRH	Remote Radio Head
RN	Remote Node
RU	Radio Unit
Rx	Receiver
SDN	Software Defined Networking
SMF	Single Mode Fibre
SSMF	Standard Single Mode Fibre
TDM	Time Division Multiplexed
TSON	Time-Shared Optical Network
Tx	Transmitter
UE	User Equipment
VCSEL	Vertical-Cavity Surface-Emitting Laser
VHDL	VHSIC Hardware Description Language
WDM	Wavelength Division Multiplexing
WP	Work Package